OMIX-ADA, Inc.
460 HORIZON DR. SUITE 100 | SUWANEE, GA 30024 | PHONE: 770-614-6101 | FAX: 770-614-6069 | info@omix-ada.com

Part #13260.01 (`15-'16 All)
13260.01 (`07-'14 W/O Subwoofer)
13260.02 (`07-'14 W/Subwoofer)

4-Door C3 Configurable Cargo Cover

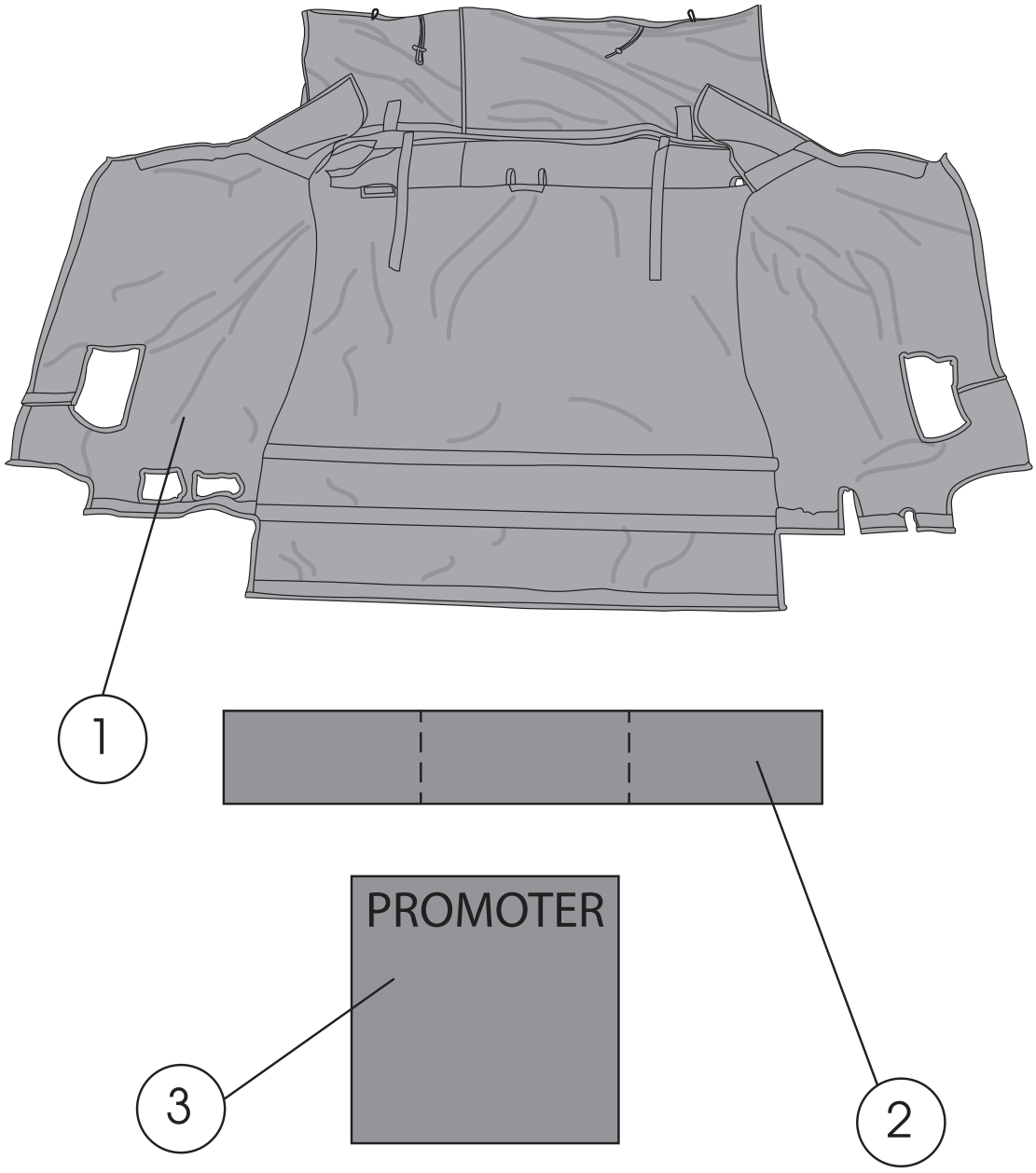

Components

1. Cargo Cover (1)
2. Hook and Loop Strip (6)
3. Adhesive Promoter (1)

Required Tools

1. Scissors
2. Isopropyl Alcohol
3. Brush or Swab
4. Flat Head Screwdriver

OMIX-ADA® TECHNICAL SUPPORT

PHONE: M-F 8am - 5pm EST 1-800-449-6649 | **EMAIL:** techsupport@omix-ada.com

FOR WARRANTY INFORMATION VISIT: www.Omix-Ada.com

Copyright © 2016 Omix-Ada®, Inc.

OMIX-ADA, Inc.

460 HORIZON DR. SUITE 100 | SUWANEE, GA 30024 | PHONE: 770-614-6101 | FAX: 770-614-6069 | info@omix-ada.com

4-Door C3 Configurable Cargo Cover

1. Place hook and loop strip to Left Hand rear tailgate as shown in Fig. A and B and cut if needed.

2.Place hook and loop strip to Right Hand rear tailgate as shown in Fig. C and D and cut to fit.

NOTICE For 2007-10 models, hook and loop strips will be applied to weather stripping. 2011-current models will be applied to plastic trim.

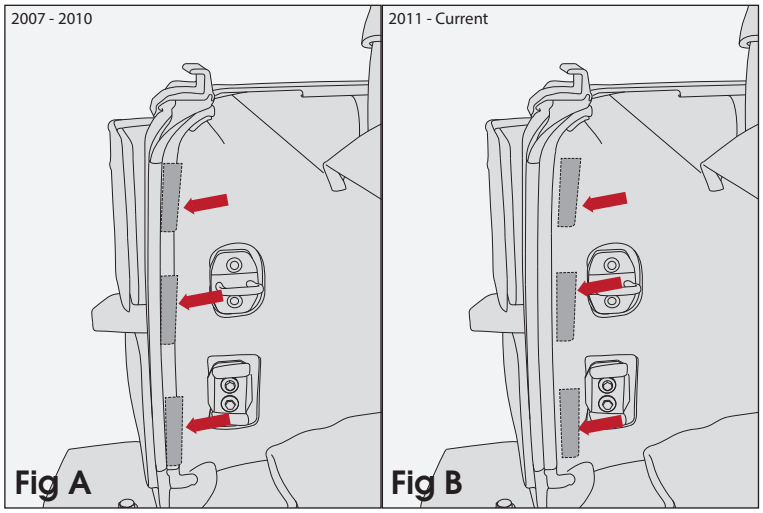

3. Clean surface where hook and loop and promoter will be applied using isopropyl alcohol and allow to dry. Apply adhesive promoter with small brush or cotton swab. Allow 30-90 seconds for adhesive promoter to dry before applying hook and loop.

4. Apply hook and loop strips to appropriate locations on vehicle. Press firmly and let stand 30 minutes for Hook and loop to bond with vehicle surface to ensure strong hold.

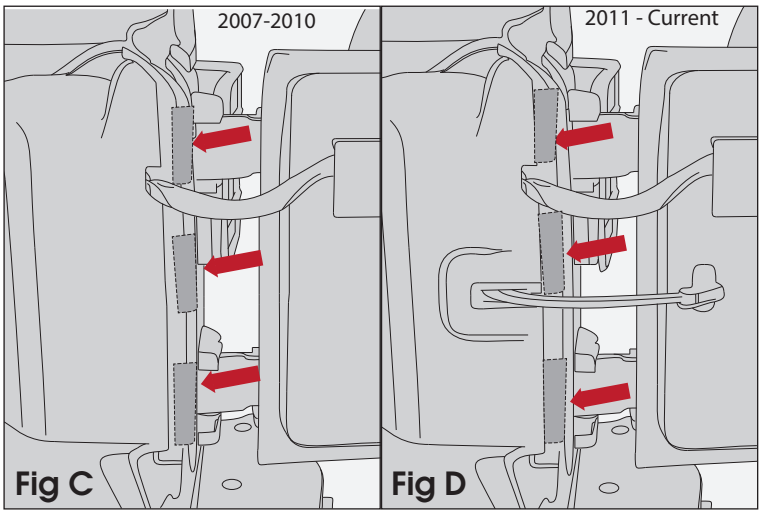

5. Lower rear seats and place Cargo Cover into vehicle as shown. Fabric side will face upward. Loop bungee around rear headrest and secure.

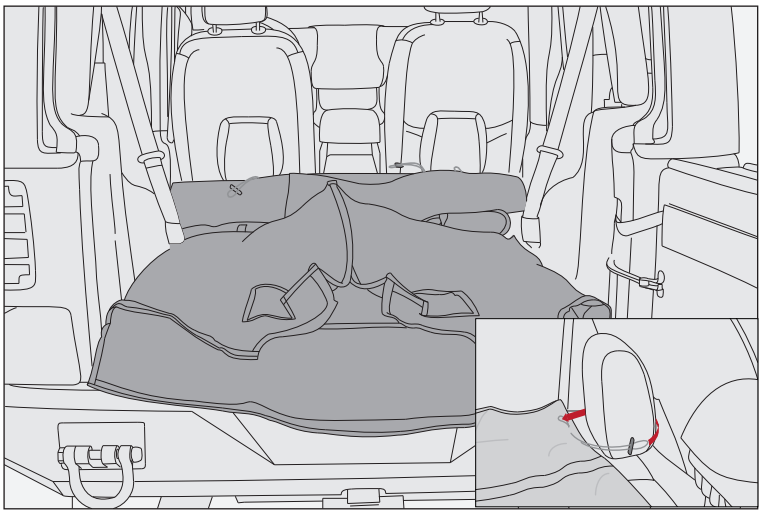

Copyright © 2016 Omix-Ada®, Inc.

OMIX-ADA, Inc.

460 HORIZON DR. SUITE 100 | SUWANEE, GA 30024 | PHONE: 770-614-6101 | FAX: 770-614-6069 | info@omix-ada.com

4-Door C3 Configurable Cargo Cover

6. Install sides around rear sport bar and trim. Insert edges of Cargo Cover between carpet and underside of body tub. Allow front section to rest over wheel well and around seatbelt.

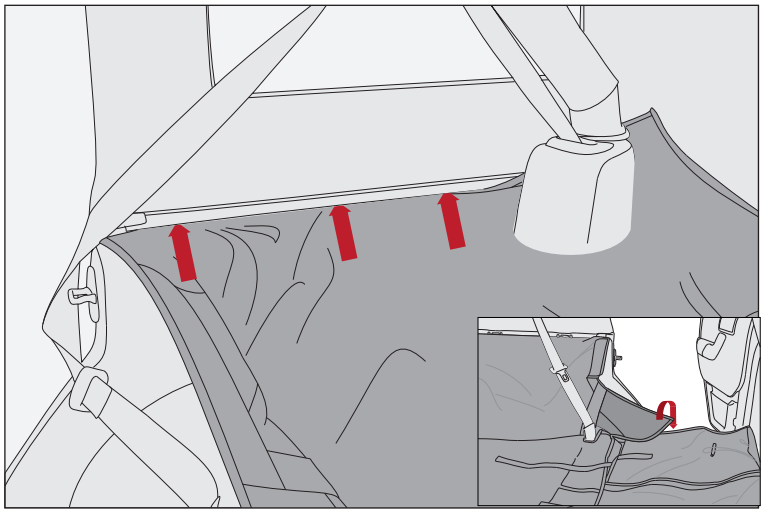

7. Raise rear seats to upright position. Twist and wrap hook and loop through two footman loops at base of seats and secure.

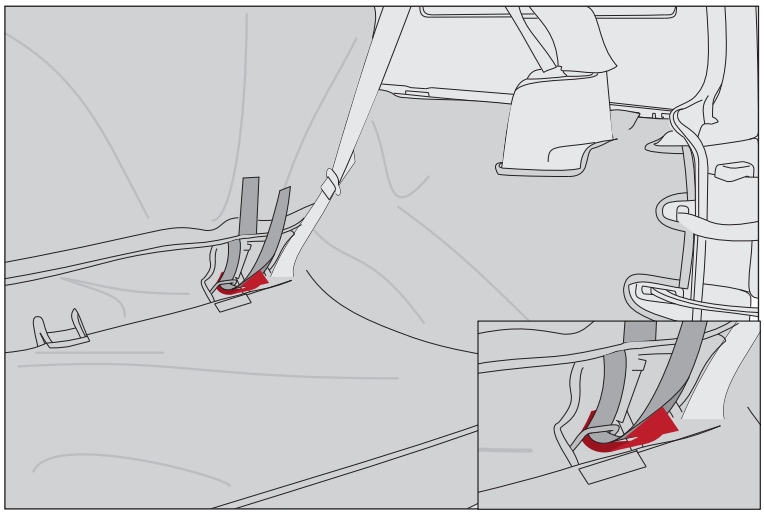

8. Starting with Left Hand side of tailgate opening, secure Cargo Cover to hook and loop strip. **Cargo Cover latch openings should be centered over tailgate ramp and striker bar.** Secure Right Hand side to hook and loop strips.

9. Open and close tailgate to ensure Cargo Cover does not interfere and tailgate opens easily.

NOTICE For 2011-current models, push edge of Cover into recess behind tailgate seal using flat head screwdriver

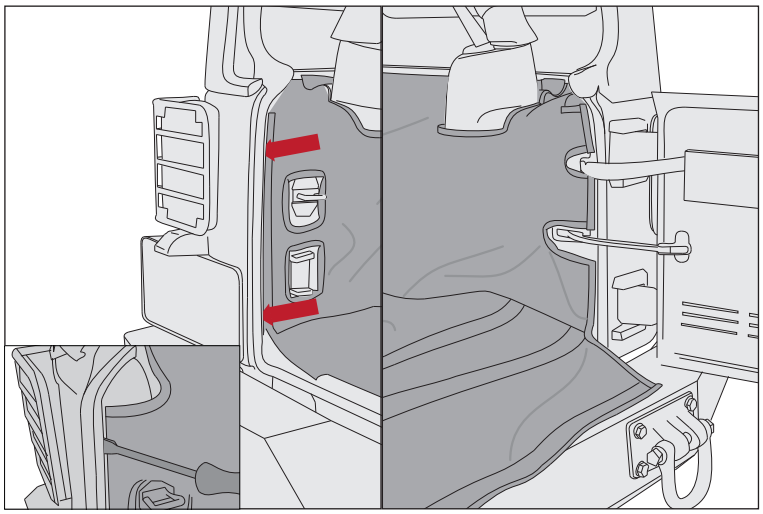

Copyright © 2016 Omix-Ada®, Inc.

OMIX-ADA, Inc.

460 HORIZON DR. SUITE 100 | SUWANEE, GA 30024 | PHONE: 770-614-6101 | FAX: 770-614-6069 | info@omix-ada.com

4-Door C3 Configurable Cargo Cover

For full coverage of cargo area:

Release hook and loop straps from footman loops at base of rear seats and lower all rear seats.

Release middle hook and loop attachment and fold top portion of Cargo Cover to back of front seats and secure hook and loop straps around headrests.

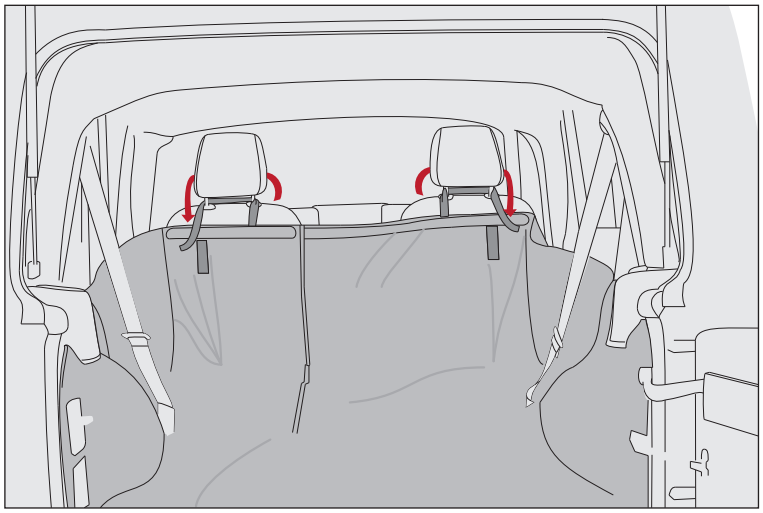

With Cargo Cover secured to front headrests, adjust side door protection cover pieces to side hook and loop strips.

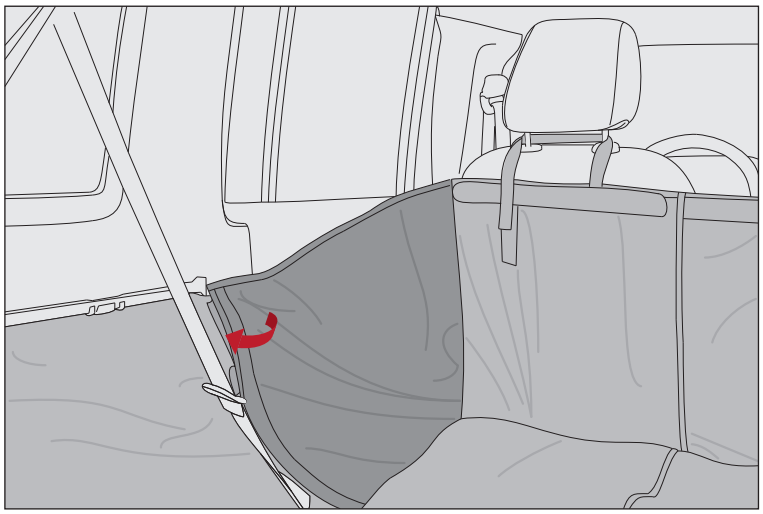

For 4-Door 60/40 Rear Seat Split:

Remove front seat hook and loop straps from desired side. Release hook and loop strip along 60/40 split and raise desired seat section. Fold fabric up to back of rear seat. Secure lower strap to footman loop at base of rear seat.

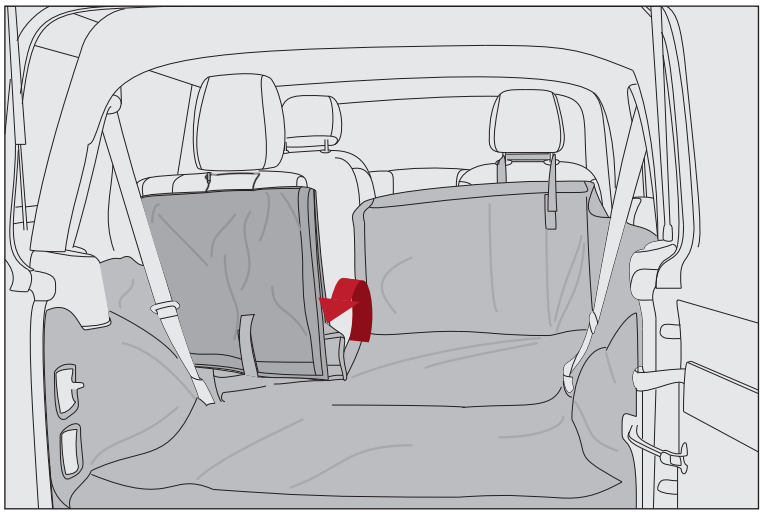

Copyright © 2016 Omix-Ada®, Inc.